Application Cases for C Profiles

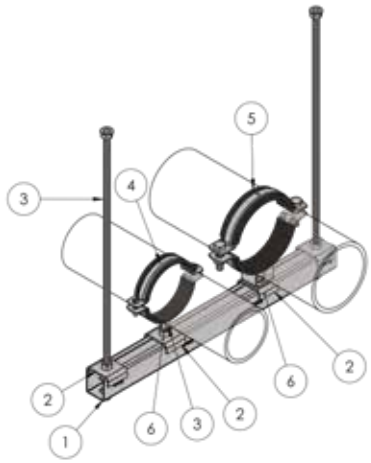

NO	DESCRIPTION	CODE
1	38x40x2 C Profile	IPC384020..
2	Profile Washer	IVPP…
3	Threaded Rod	IRRT…
4	Std. Pipe Clamp With Rubber Profile&Combi Nut	IKKS…
5	Heavy Duty Pipe Clamp With Rubber Profile	IKAK…
6	C Profile Nut	ISC…

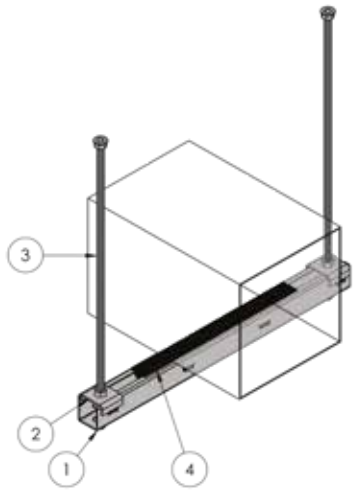

NO	DESCRIPTION	CODE
1	38x40x2 C Profile	IPC384020..
2	Profile Washer	IVPP…
3	Threaded Rod	IRRT…
4	C Profile Rubber	ZLIC..

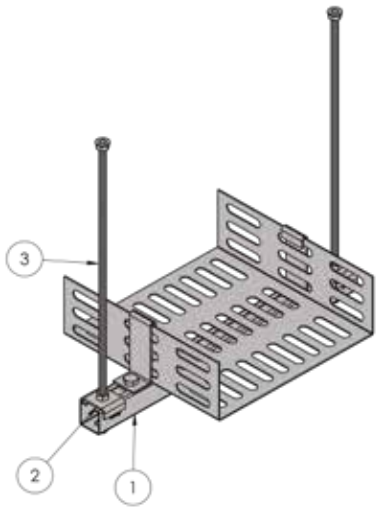

NO	DESCRIPTION	CODE
1	38x40x2 C Profile	IPC384020..
2	Profile Washer	IVPP…
3	Threaded Rod	IRRT…